VECTOR 101- 3X STEERING **for use with motors with serial numbers beginning MKAE**

SUPER DUTY BRACKET 3-year warranty from the date of purchase

101 LBS THRUST

36 VOLT 37 AMPS

42” SHAFT

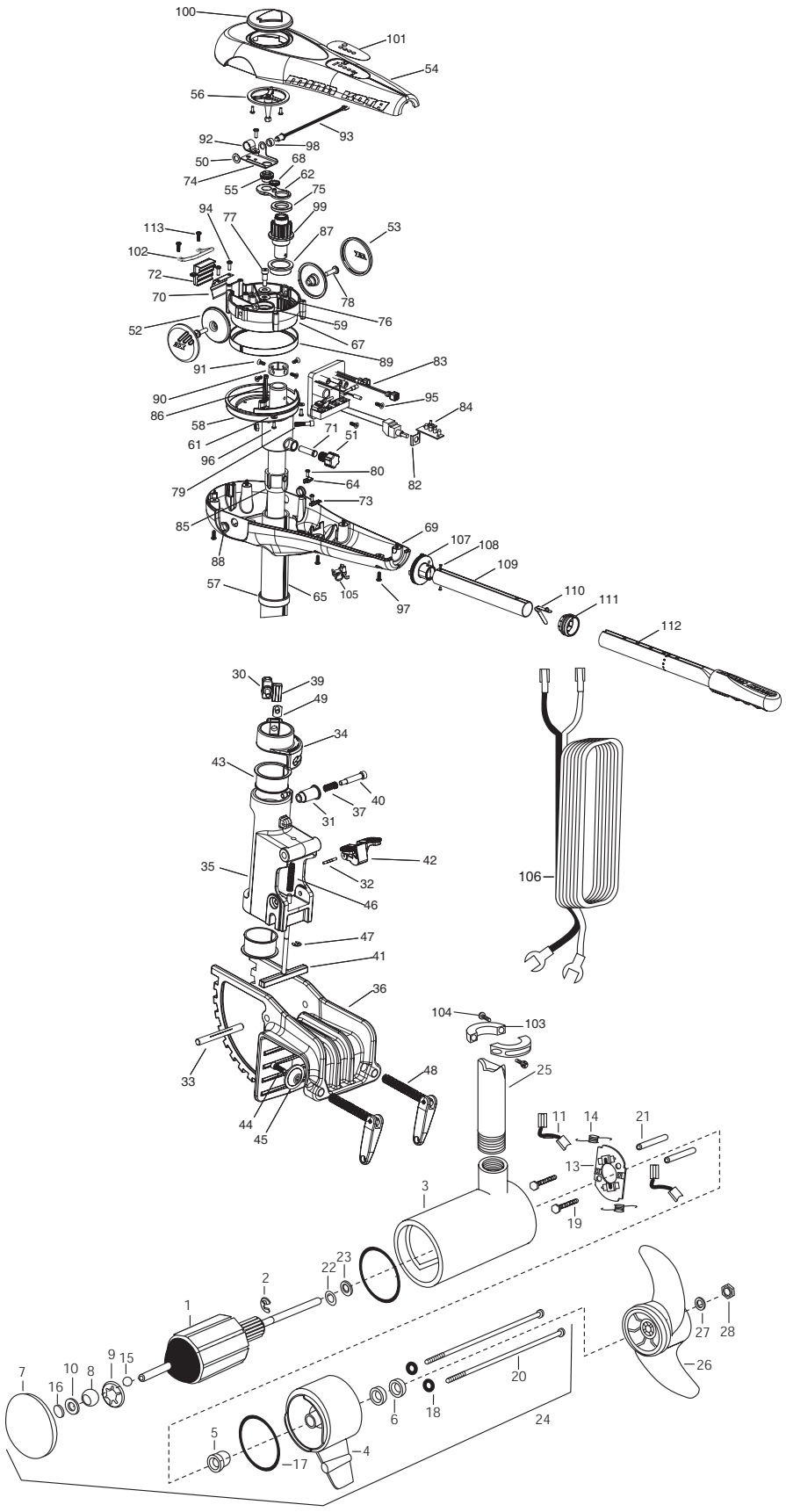

1	2-100-110	ARMATURE ASSEMBLY 36V 4 VARS FW 101#
2	788-040	RETAINING RING
3	2-200-110	CENTER HOUSING ASSEMBLY 4.0 FW TXT
4	2-300-160	BRUSH END HOUSING ASSEMBLY 4.0 FW
5	144-017	BEARING -FLANGE (SERVICE ONLY)
6	880-025	**SEAL [2.EA]
7	2-400-160	PLAIN END HOUSING ASSEMBLY 4.0
8	144-021	BEARING -SPHERICAL
9	784-025	BEARING RETAINER
10	991-040	FELT WASHER
11	188-094	BRUSH 4"W/TERMINAL [2.EA]
12B	640-018	BRUSH WIRE- BLACK 10 AWG 62 1/2" XLP
12R	640-123	BRUSH WIRE- RED 10 AWG 64 XLP
13	738-004	BRUSH PLATE - 4" TERMINAL
14	975-041	SPRING -TORSION [2.EA]
15	116-025	BALL-STEEL
16	303-043	THRUST DISC- METAL
17	701-009	**O-RING -THRU BOLT [2.EA]
18	701-043	**O-RING (2 REQ'D)
19	830-027	SCREW -SELF TREADED 10-32 X 2" [2.EA]
20	830-096	THRU BOLT 12-24 X 11.56" SS [2.EA]
21	973-025	SPACER -BRUSH PLATE [2.EA]
22	990-051	WASHER-THRUST, STEEL
23	990-052	WASHER- NYLATRON
24	2317055	MOTOR ASSEMBLY 36V VARS TXT
25	2072001	TUBE (COMP) W/3:1, 42"
■	1378130	PROPELLER KIT (includes 26-28)
26	2331130	PROPELLER W/WEDGE
27	2091701	WASHER-5/16 SS
28	2093101	NUT-PROP NYLOC
30	2011385	SCREW-TENSION
31	2070100	KNOB ORIENTATION COLLAR
32	2070513	PIN HINGE ZINC
33	2070515	PIN PIVOT ZINC
34	2071505	ORIENTATION COLLAR
■	2991825	BRACKET/HINGE ASSEMBLY
35	2071872	HINGE 3:1 BRACKET
36	2071941	BRACKET FW BLACK
37	2072700	SPRING
39	2072801	TENSION BLOCK
40	2073402	SCREW 5/16 X 1 1/4" SHOULDER
41	2073603	T-BAR
42	2077202	TILT LEVER
43	2077310	BUSHING HINGE [2 EA.]
44	2263452	SCREW 1/4-20 SHCS [2 EA.]
45	2331700	WASHER CLAMP
46	2332700	SPRING
47	2013000	E-RING
48	2991301	CLAMP/HANDLE ASSEMBLY [2 EA.]
49	2263101	NUT-T
50	2013100	SPEED NUT
51	2070105	KNOB-TENSION
52	2070110	PIVOT KNOB [2 EA.]
53	2070117	COVER-PIVOT KNOB [2 EA.]
54	2070201	COVER 3:1
55	2070801	COUPLER SOCKET
56	2070810	COUPLER DRIVE
57	2071500	COLLAR LOWER SUPPORT
58	2071512	YOKE-GEAR CARRIER
59	2071712	WASHER NYLATRON [2 EA.]
60	2071712	WASHER SS
61	2071714	WASHER FLAT #6 [2 EA.]
62	2071900	IDLER PLATE
64	2071905	BRACKET- SENSOR SWITCH
65	2072041	OUTER TUBE 3:1 42"
67	2072210	GEAR CARRIER
68	2072215	GEAR- IDLER
69	2072501	CONTROL BOX
70	2072705	SPRING DETENT
71	2072710	SPRING TENSION SLEEVE
72	2072810	DETENT BLOCK-TILT
73	2072811	DETENT BLOCK-SWITCH
74	2072900	RETAINER COUPLER
75	2073000	RING PRELOAD
76	2073100	HEX NUT - NYLOC [3 EA.]
77	2073400	SCREW 5/16" X 1/2" SHOULDER
78	2073408	SCREW [2 EA.]
79	2073410	SCREW
80	2073414	SCREW 6-32 PPH [2 EA.]
82	2074000	POT CLIP
83	2074061	CONTROL BOARD ASSEMBLY
84	2074072	BATTERY METER
85	2075100	TENSION SLEEVE
86	2076700	KEY - TUBE
87	2077305	BEARING UPPER
88	2077316	BUSHING PIVOT [2 EA.]
89	2077320	BEARING - GEAR CARRIER
90	2071560	COLLAR TUBE
91	2223468	SCREW 8-32 [4 EA.]
92	2263201	CLAMP WIRE HARNESS
93	2264015	LIGHT INDICATOR
94	2372100	SCREW 8-18 SS [2 EA.]
95	2332101	SCREW 8-32 SS [2 EA.]
96	2332103	SCREW 6-20 SS [5 EA.]
97	2012100	SCREW 8-18 X 5/8"
98	2071525	SPACER-INDICATOR LIGHT
99	2992205	PINION - MAIN
100	2998600	INDICATOR ASSEMBLY
101	2075613	DECAL COVER VECTOR 101
102	2072815	BRACKET- TILT STOP
103	2261622	COLLAR HALF [2 EA.]
104	2263453	SCREW 1/4-20 X 1" [2 EA.]
105	2052900	STRAIN RELIEF
106	2090600	LEADWIRE
107	2990404	PIVOT HANDLE ASSEMBLY
108	2072102	SCREW #6 X 1/4" [2 EA.]
109	2070425	HANDLE TUBE
110	2070411	LATCH-BUTTON
111	2070010	BEARING
112	2990931	HANDLE ASSEMBLY-EXT.
113	2332101	SCREW #8-32 X 1/2" SS [2 EA.]

****Seal & Oring Kit P/N 2889460** * This item is part of an assembly. This item cannot be sold separately due to machining and /or assembly that is required.

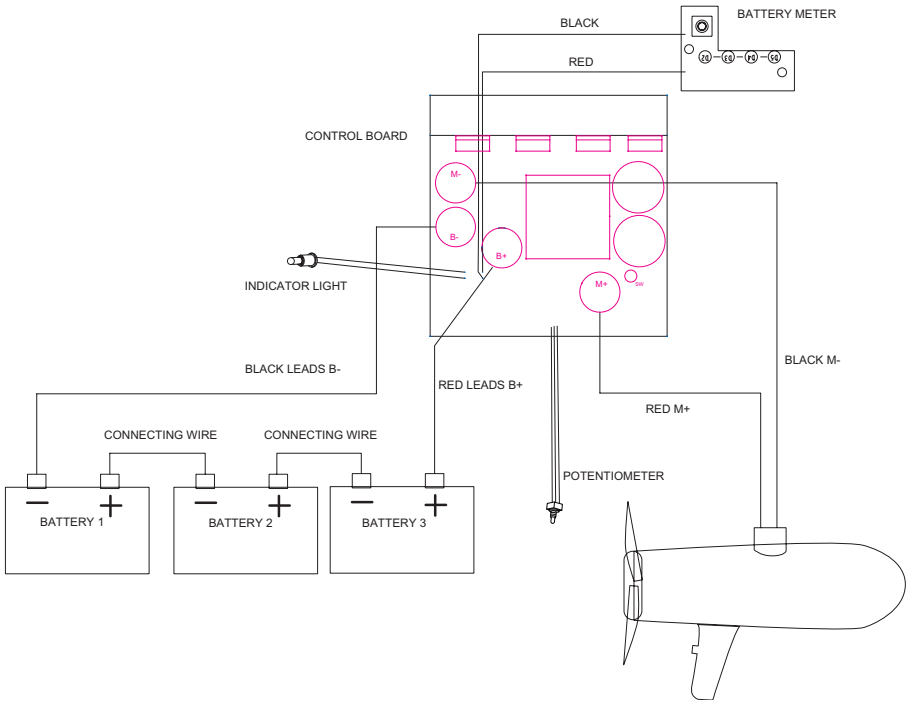
BATTERY METER
BLACK
RED
CONTROL BOARD
M-
B-
B+
M+
INDICATOR LIGHT
BLACK LEADS B-
RED LEADS B+
RED M+
BLACK M-
CONNECTING WIRE
CONNECTING WIRE
POTENTIOMETER
BATTERY 1
BATTERY 2
BATTERY 3