1998 Minn Kota Maxxum 54 – 42”

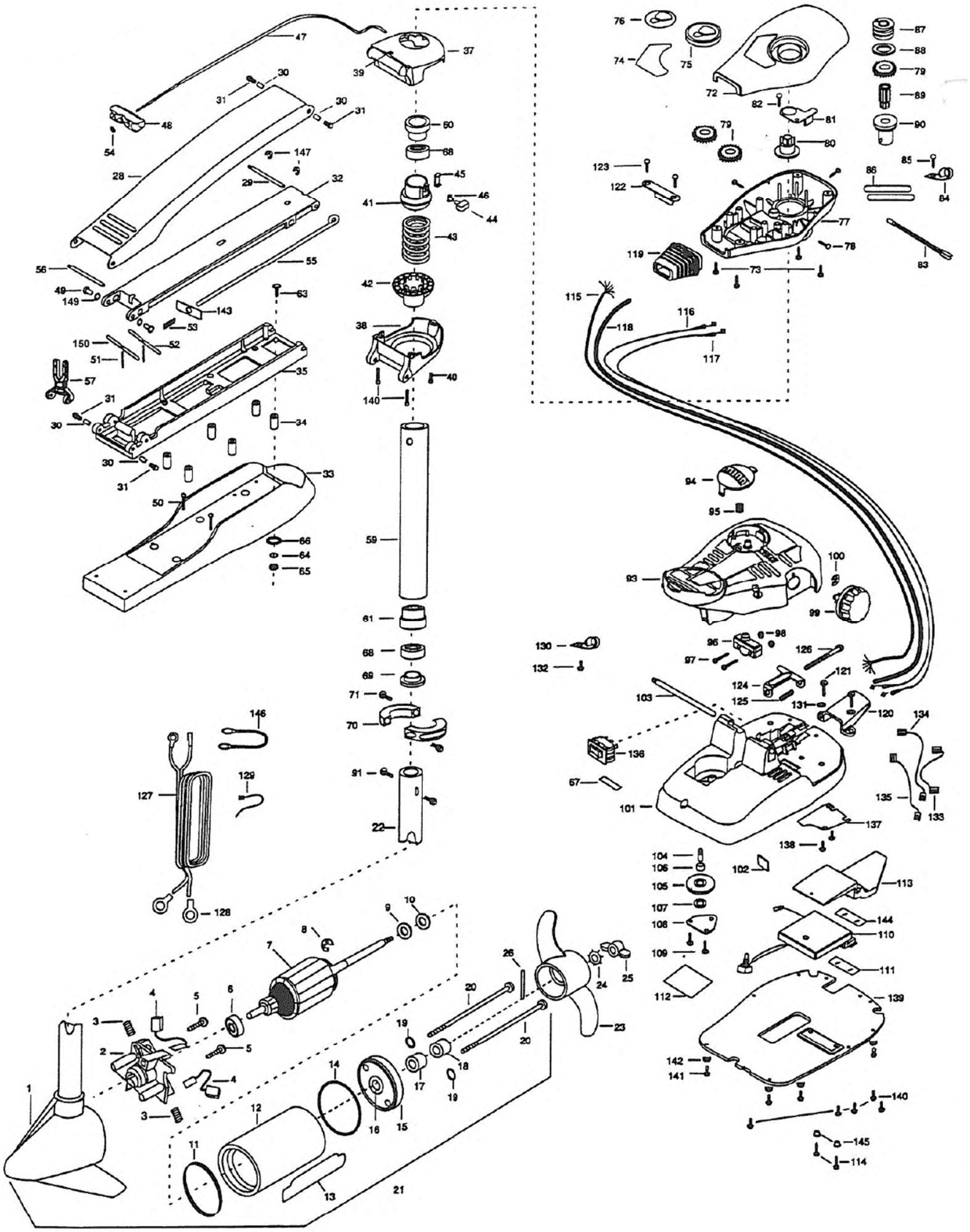

Wiring Diagram

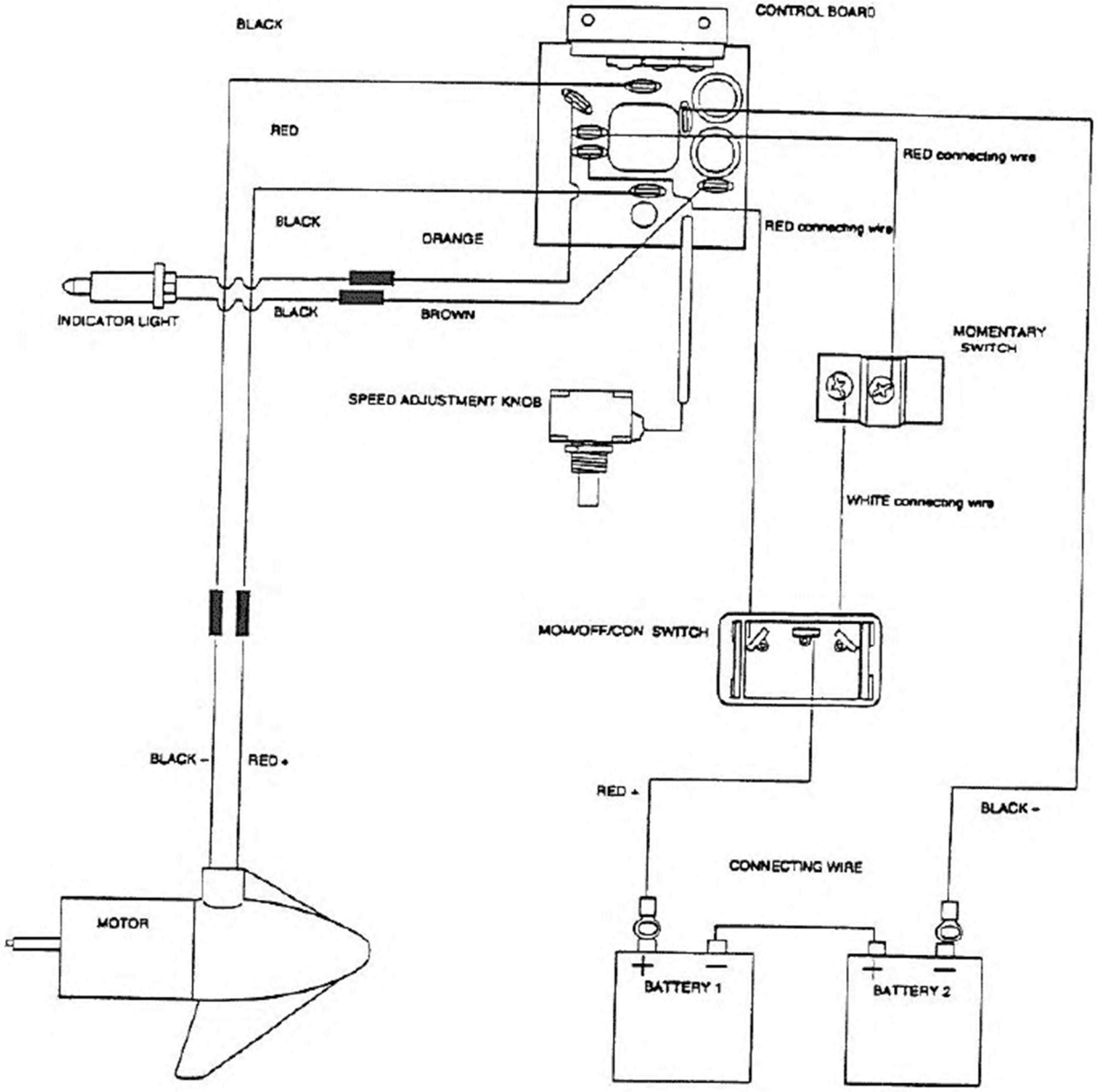

Diagram #	Product Info
1	HSG BRUSH END - 421-065
2	BRUSH PLATE WITH HOLDER - 738-036
3	SPRING - TORSION - 975-040
4	BRUSH ASSY 3.625" - 188-036
5	SCREW - 830-007
6	BEARING - BALL - 140-010
7	ARMATURE 24V - 92-100-101
8	RETAINING RING - 788-015
9	WASHER - STEEL THRUST - 990-067
10	WASHER - NYLATRON - 990-070
11	GASKET - 337-036
12	CENTER HOUSING ASSY - 92-200-101
13	Minn Kota Trolling Motor Part Not Available
14	O-RING - 701-081
15	PLAIN END HOUSING ASSY - 92-400-101
16	BEARING - FLANGE - 144-049
17	SEAL - 880-003
18	SEAL WITH SHIELD - 880-006
19	O-RING - 701-008
20	THRU BOLT 10-32 X 8.83 - 830-042
21	Minn Kota Trolling Motor Part Not Available
22	TUBE COMP 42" W/BEARING RACE - 2772003
23	Minn Kota Weedless Wedge Propeller 2091150 / MKP-7 / 1378122 / 1865006
24	LOCKWASHER-PROP (MEDIUM) 2051700
25	NUT-PROP (MEDIUM) - 2053100
26	PIN-DRIVE (95-4HP'S) (SS) - 2092600
27	Minn Kota Trolling Motor Part Not Available
28	ARM-UPPER STD, FW, TX - 2264241
29	MAXXUM/RT REMOVABLE BG360 KIT - 2882604
30	BUSHING, STAINLESS STEEL - 2293501

31	BOLT, SHOULDER (MAXXUM) - 2263500
32	ARM-LOWER ASSY FW STD. - 2774315
33	MOTOR REST STD MAXXUM BLK - 2263916
34	SPACER, MOTOR REST - 2261505
35	BOWPLATE/UPPER ARM STD FW - 2774241
36	BRACKET ASSY BG (FW) MAXXUM - 2771937
37	BRKT BTTM/BEARING FW ASY,S - 2771994
38	BRKT BTTM/BEARING FW ASY,S - 2771994
39	ROPE GUIDE/JAM NUT KIT - 2772352
40	SCREW 1/4-20 X 3/4"(ZINC - 2263402
41	TUBE INSERT/SPRING SLEEVE ASSY - 2884701
42	TUBE INSERT/SPRING SLEEVE ASSY - 2884701
43	SPRING, BOWGUARD, F/C, PAINTED - 2262712
44	SCREW-TENSION/NEW KNOB(SS - 2011386
45	Minn Kota Trolling Motor Part Not Available
46	NUT-1/4-20 INSERT S/S - 2263101
47	ROPE W/WASHER(40")MX MT - 2881601
48	PULL-GRIP (RAW) - 2150400
49	BUSHING, FLANGE 5/16 5L7-F-64 - 2267318
50	SCREW, 8-18 X 1" PPH S/S - 2263434
51	SPRING-PIN - 2152612
52	LOCK BAR - 2233620
53	SPRING-(LOCKBAR) CAD.PLTD - 2152700
54	WASHER-EYE SHAFT(.562 OD) 2151700
55	EYE SHAFT-2LOCKBAR STD SS - 2153603
56	HINGE-PIN (HEADLESS)ZINC - 2260506
57	YOKE,MAX MNT-POLYPROPYLENE - 2293811
58	TUBE W/BEARING RACE ASSY - 2772012
59	TUBE W/BEARING RACE ASSY - 2772012
60	BEARING RACE-(565T) - 2266260
61	BEARING RACE-STEEL - 2266220
62	BAG ASSY-MAXXUM - 2994830

63	BAG ASSY-MAXXUM - 2994830
64	WASHER-1/4 FLAT S/S - 2261713
65	NUT 1/4-20 NYLOC - 2263103
66	WASHER-MOUNTING*RUBBER - 2301720
67	DECAL-ON/OFF SWITCH - 2266610
68	BEARING BALL-STEEL - 2266000
69	BEARING CONE - 2266115
70	COLLAR HALVES KIT-BAG ASSY - 2771622
71	SCREW - 2263452
72	CONTROL BOX COVER-MAXXUM - 2260283
73	SCREW-8-18 X 5/8 THD* (SS - 2372100
74	DECAL - GENERIC - 2265627
75	POINTER DISC TRNSLCNT RED - 2260150
76	DECAL-INDICATOR - 2265800
77	CONTROL BOX KIT - 2882531
78	SCREW-8-32 X 1/2 TRI-LOBE PPH 2053414
79	GEAR-INDICATOR - 2267800
80	INDICATOR-DRIVE - 2262220
81	BRACKET/INDICATOR - 2261905
82	SCREW-8-18 X 1/2 (SS)* - 2301310
83	LIGHT/INDICATOR - 2264015
84	CLAMP WIRE HARNESS MICRO - 2263201
85	SCREW-8-18 X 1/2 (SS)* - 2301310
86	SHRINK TUBE-3/8 OD X 2" - 2355410
87	PULLEY-CABLE DRUM - 2232360
88	WASHER-NYLON A/T CON B - 2261730
89	Minn Kota Trolling Motor Part Not Available
90	TOP BEARING RACE/PINION - 2996246
91	SCREW-8-32 X 5/16(ZN PL) - 2263410
92	Minn Kota Trolling Motor Part Not Available
93	FOOT PEDAL W/PLUG SERVICE - 2774496
94	PUSH-BTTN FT PED W/MAGNET CAVITY - 2263702

95	SPRING-LOWER PEDAL S/S - 2302732
96	SWITCH MOMENTARY - 2264040
97	SCREW-MOUNTING/SWITCH - 2262114
98	NUT-SWITCH MOUNT - 2233100
99	KNOB-SPEED CTRL,VARS SPD - 2280115
100	E-RING TRU-ARC - 2263000
101	FOOT PEDAL BASE ASSY - 2774550
102	TENSION SCREW - 2266413
103	PIN-PIVOT A/T FT PDL - 2260511
104	Minn Kota Trolling Motor Part Not Available
105	Minn Kota Trolling Motor Part Not Available
106	Minn Kota Trolling Motor Part Not Available
107	Minn Kota Trolling Motor Part Not Available
108	COVER-PULLEY (STAMPING) - 2266401
109	SCREW-8-18 X 1/2 (SS)* - 2301310
110	CTRL BRD/BTM PLATE,MAX 24/36V - 2884052
111	Minn Kota Trolling Motor Part Not Available
112	INSULATING PAD (2.3 X 3.2) - 2365107
113	Minn Kota Trolling Motor Part Not Available
114	SCREW, 8-32 X 1" - 2263447
115	WIRE HARNESS, MAXXUM FT.PE - 2261220
116	CABLE ASSY-RIGHT (5') BAGGED - 2887500
117	CABLE ASSY-LEFT (5') BAGGED - 2887510
118	CABLE JACKET (5') - 2265430
119	BOOT-CONTROL BOX - 2265110
120	BOOT-FOOT PEDAL BASE - 2265115
121	SCREW-8-18 X 5/8 THD* (SS - 2372100
122	CONTROL BOX KIT - 2882531
123	SCREW, 8-18 X 1" PPH S/S - 2263434
124	BRACKET-CONDUIT ADJUSTMEN - 2263210
125	SPRING-CONDUIT AD - 2262720
126	SCREW-1/4-20 X 2" S/S PPH ADJT - 2263462

127	Minn Kota Trolling Motor Part Not Available
128	Minn Kota Trolling Motor Part Not Available
129	TIE WRAP-5.5" BLACK - 2256300
130	CLAMP WIRE HARNESS MICRO - 2263201
131	WASHER-MAXXUM FT PDL 18/8 SS - 2261714
132	SCREW-6-20 X 3/8 THD*(SS) - 2332103
133	CONNECTING WIRE (VAR.SPD) - 2260316
134	WIRE,BLK W/WHT STRP 19 1/4" - 2260312
135	WIRE,BLK W/GRN STP VARIABLE - 2260323
136	SWITCH-MOM/OFF/COM - 2254031
137	SWITCH PLATE, FT PEDAL - 2266412
138	SCREW-6-20 X 3/8 THD*(SS) - 2332103
139	BOTTOM PLATE/INSULATING PAD KIT - 2774512
140	SCREW-8 X 1/2" (S/S) - 9953104
141	SCREW 12-14X1/2 THR FRM - 2263455
142	BUMPER PAD, FOOT PEDAL - 2265126
143	SPRING STOP - 2262703
144	Minn Kota Trolling Motor Part Not Available
145	SHOULDER WASHER MAXXUM FT PDL - 2261712
146	CONNECTOR CABLE-(24 VOLT) - 2090620
147	E-RING 3/8 DIA. SHAFT - 2263010
148	Minn Kota Trolling Motor Part Not Available
149	WASHER - 2261708
150	LOCK BAR - 2233622