Edge 55 hand control
55 lbs thrust
12 volt 50 amps
52" shaft

for use with "O" serial numbers
2-year warranty

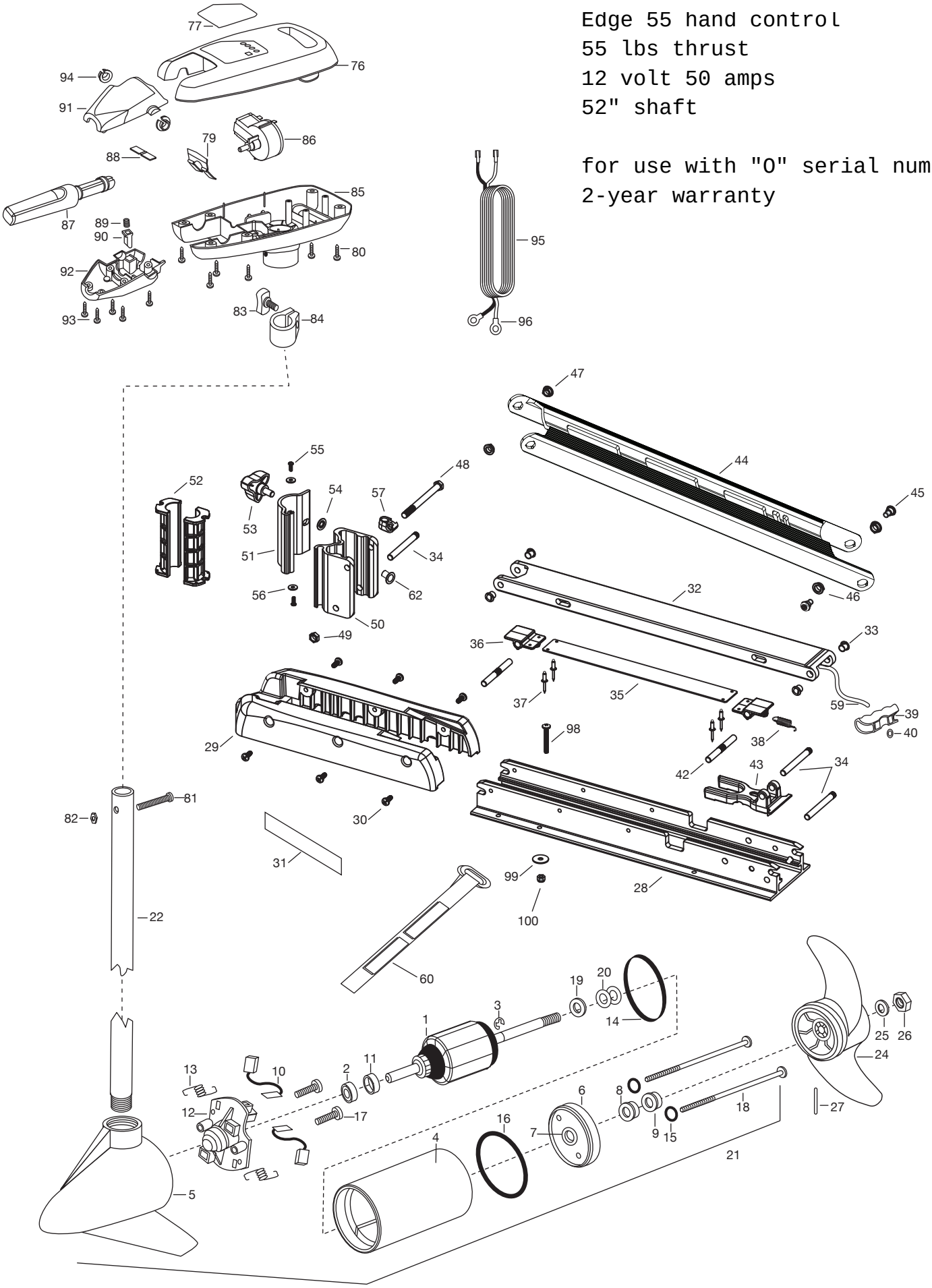

PARTS LIST

ITEM #	QTY	PART NUMBER	DESCRIPTION
1	1	2-100-121	ARMATURE ASSEMBLY 12 V 3.625
2	1	140-010	BEARING BALL
3	1	788-015	RETAINING RING
4	1	2-200-101	CENTER HOUSING ASSEMBLY
5	1	2-300-199	BRUSH END HOUSING ASSEMBLY SPDCO
6	1	2-400-101	PLAIN END HOUSING ASSEMBLY
7	1	144-049	BEARING- FLANGE SERVICE ONLY
8	1	880-003	SEAL
9	1	800-006	SEAL-W/SHIELD
10	2	188-036	BRUSH ASSEMBLY
11	1	725-035	TUBE- BRUSH RETENTION
12	1	738-036	BRUSH PLATE WITH HOLDER
13	2	975-040	SPRING- COMPRESSION
14	1	337-036	GASKET
15	2	701-008	O-RING THRU BOLT
16	1	701-081	O-RING
17	2	830-007	#8-32 SCREW
18	2	830-042	THRU BOLT 10-32X8.83
19	1	990-067	WASHER- STEEL THRUST
20	2	990-070	WASHER-NYLATRON
21	1	2097087	MOTOR ASSEMBLY 12V F/W 3.625 5SPCO
22	1	2032068	TUBE- COMPOSITE-52”
■	1	1378131	PROPELLER KIT
*24	1	2061160	PROPELLER- W/WEDGE 2
*25	1	2151726	WASHER- 5/16 SS
*26	1	2053101	NUT-PROP NYLOC
*27	1	2092600	PIN-DRIVE
28	1	2266502	BOWPLATE, FW, STD, 45”
29	1	2263905	MOTOR REST, BLK.
30	6	2303430	SCREW 1/4-20 X 5/8
31	2	2265667	MOTOR REST DECAL, FW
■	1	2991716	MOUNT, ASSEMBLY SHORT SW
32	1	2264342	LOWER ARM, FW, STD.
33	4	2266002	NYLINER 3/8” SHAFT
34	3	2260503	PIVOT PIN
■	1	2993811	LATCH STRAP ASSEMBLY, STD, 45”
35	1	2263605	LATCH STRAP, STD, 45”
36	2	2261902	BRACKET-LATCH
37	4	2268602	RIVET 1/8” SS
38	1	2262709	SPRING-LATCH PIN
39	1	2150400	PULL-GRIP
40	1	2151700	WASHER-EYE SHAFT .562 OD
42	2	2260501	LATCH PIN
43	1	2261544	YOKE-TUBE

ITEM #	QTY	PART NUMBER	DESCRIPTION
44	1	2264271	ARM-UPPER, SHORT FW
45	2	2263510	BOLT-SHOULDER, SS
46	1	2267302	BUSHING-LOWER 7/16” ID, SS
47	1	2267303	BUSHING-UPPER 3/8” ID, SS
48	1	2263505	BOLT 3/8-16 X 4/25”
49	1	2263114	NUT-NYLOCK JAM 3/8-16
50	1	2261872	HINGE BASE, FW
51	1	2261877	HING DOOR, FW
52	2	2261537	HINGE SLEEVE
53	1	2260905	HANDLE-SOFT GRIP, L&D
54	1	2261728	WASHER-RETAINING 3/8”
55	2	2053415	SCREW #8-32 X 3/8” TRI
56	2	2261732	WASHER #8, NYLON
57	1	2262310	ROPE GUIDE
59	1	2251601	ROPE- 44.5”
60	1	2263805	VELCRO STRAP
62	1	2264703	INSERT - THREADED
76	1	2060285	COVER-CONTROL BOX
77	1	2275617	DECAL-COVER EDGE 55/H
79	1	2302743	SPRING-DETENT HANDLE-TILT
80	6	2303412	SCREW-6-20 X 5/8 SELF TAP
81	1	2033400	SCREW-10-24 X 1-3/4
82	1	2013110	NUT-10-24 HEX (ZCP)
83	1	2011365	SCREW-COLLAR/NEW KNOB
84	1	2031520	COLLAR-DEPTH W/O INSERT
85	1	2062551	CONTROL BOX PLAS W/HAND
86	1	2064028	SWITCH-FWD/REV 5SP
87	1	2990912	HANDLE ASSEMBLY-W/U-JOINT 5SP
88	1	2302742	SPRING-DETENT OFF
89	1	2302745	SPRING-RELEASE BUTTON
90	1	2303720	RELEASE BUTTON-HANDLE
91	1	2060408	HANDLE- TOP HALF
92	1	2060415	HANDLE- LOWER HALF
93	5	2303412	SCREW-6-20 X 5/8 SELF TAP
94	2	2060005	BEARING-HANDLE PIVOT
95	1	2090650	LEADWIRE -10 GA RINGS
96	2	2020700	TERMINAL RING, 3/8”
■	1	2994838	BAG ASSEMBLY-BOLTS NUTS WASHERS
*98	6	2263462	SCREW 1/4-20X2 SS
*99	6	2261713	WASHER-1/4 FLAT 18-18
*100	6	2263103	NUT- 1/4-20 NYLOC-JAM
■	1	2888460	SEAL & ORING KIT
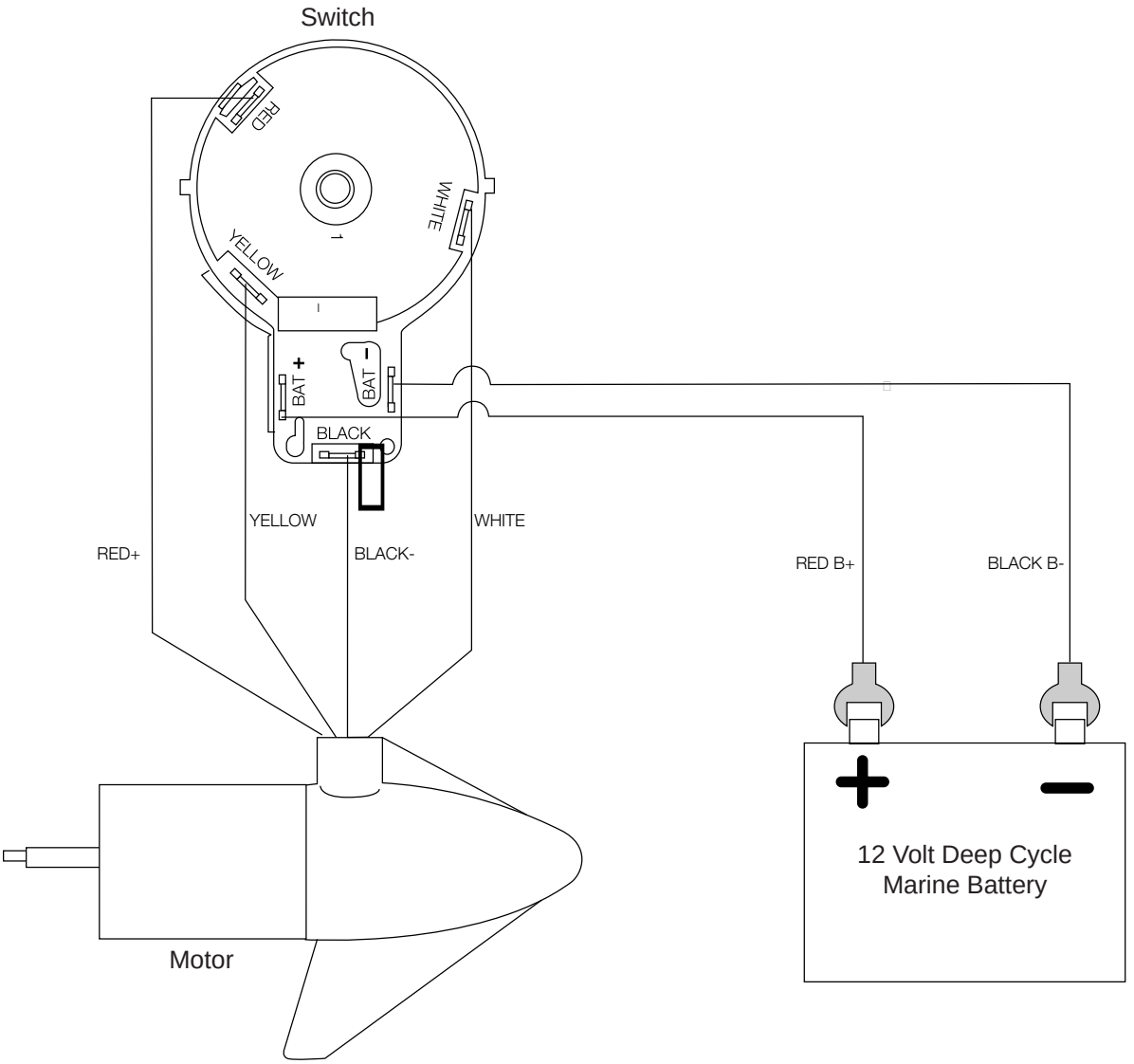
WIRING DIAGRAM